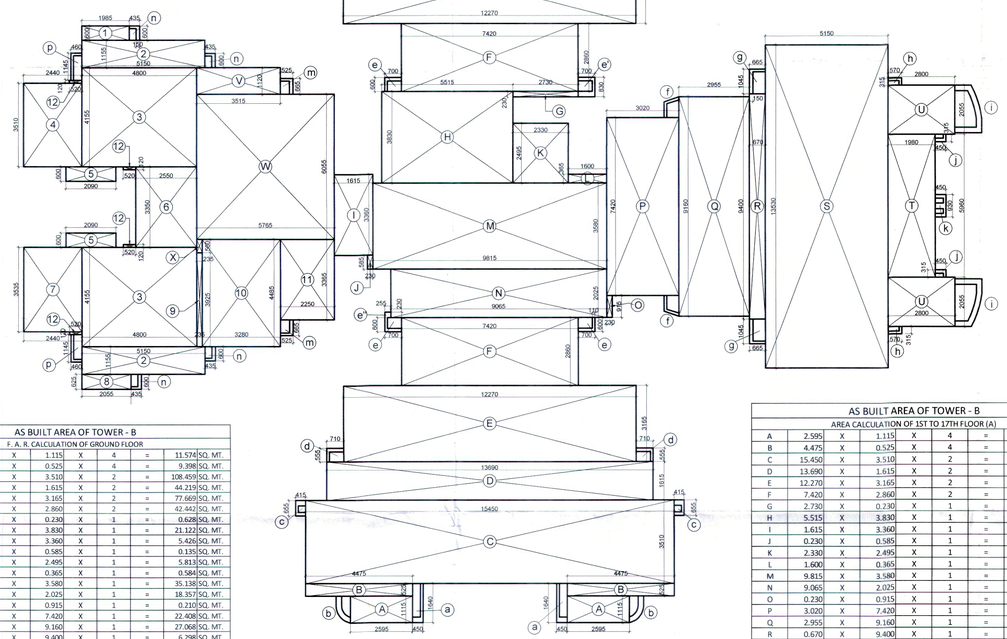

GROUND FLOOR (AREA DIAGRAM)

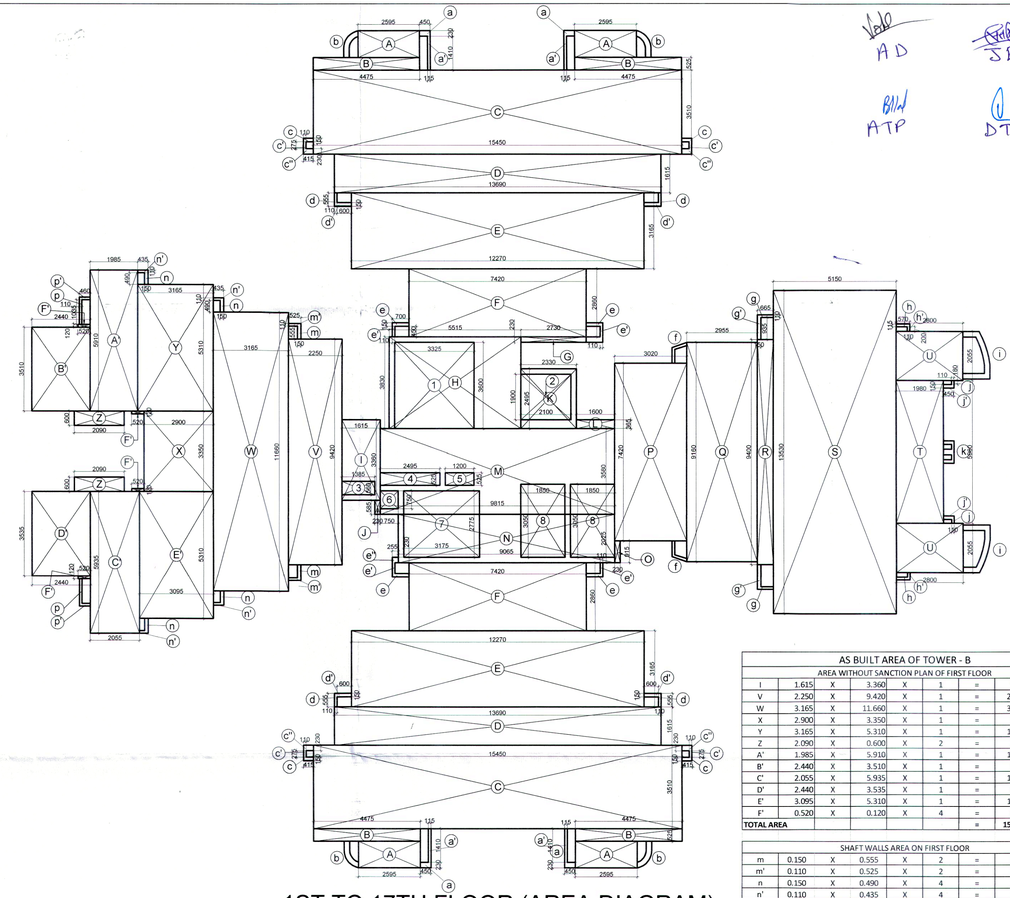

1ST TO 17TH FLOOR (AREA DIAGRAM)

AD

JE

ATP

DTP

AS BUILT AREA OF TOWER - B								
F. A. R. CALCULATION OF GROUND FLOOR								
A	2.595	X	1.115	X	4	=	11.574	SQ. MT.
B	4.475	X	0.525	X	4	=	9.398	SQ. MT.
C	15.450	X	3.510	X	2	=	108.459	SQ. MT.
D	13.690	X	1.615	X	2	=	44.219	SQ. MT.
E	12.270	X	3.165	X	2	=	77.669	SQ. MT.
F	7.420	X	2.860	X	2	=	42.442	SQ. MT.
G	2.730	X	0.230	X	1	=	0.628	SQ. MT.
H	5.515	X	3.830	X	1	=	21.122	SQ. MT.
I	1.615	X	3.360	X	1	=	5.426	SQ. MT.
J	0.230	X	0.585	X	1	=	0.135	SQ. MT.
K	2.330	X	2.495	X	1	=	5.813	SQ. MT.
L	1.600	X	0.365	X	1	=	0.584	SQ. MT.
M	9.815	X	3.580	X	1	=	35.138	SQ. MT.
N	9.065	X	2.025	X	1	=	18.357	SQ. MT.
O	0.230	X	0.915	X	1	=	0.210	SQ. MT.
P	3.020	X	7.420	X	1	=	22.408	SQ. MT.
Q	2.955	X	9.160	X	1	=	27.068	SQ. MT.
R	0.670	X	9.400	X	1	=	6.298	SQ. MT.
S	5.150	X	13.530	X	1	=	69.680	SQ. MT.
T	1.980	X	5.960	X	1	=	11.801	SQ. MT.
U	2.800	X	2.055	X	2	=	11.508	SQ. MT.
V	3.515	X	1.120	X	1	=	3.937	SQ. MT.
W	5.765	X	6.055	X	1	=	34.907	SQ. MT.
X	0.235	X	0.560	X	1	=	0.132	SQ. MT.
TOTAL AREA (A)						=	568.912	SQ. MT.

SHAFT WALLS AREA ON TYPICAL FLOOR								
a	0.450	X	1.640	X	4	=	2.952	SQ. MT.
b	AS PER PLINE		0.550	X	4	=	2.200	SQ. MT.
c	0.415	X	0.665	X	4	=	1.104	SQ. MT.
d	0.710	X	0.555	X	4	=	1.576	SQ. MT.
e	0.700	X	0.600	X	3	=	1.260	SQ. MT.
e'	0.700	X	0.830	X	1	=	0.581	SQ. MT.
e"	0.255	X	0.230	X	1	=	0.059	SQ. MT.
f	AS PER PLINE		0.460	X	2	=	0.920	SQ. MT.
g	0.665	X	1.045	X	2	=	2.090	SQ. MT.
h	0.570	X	0.315	X	2	=	0.630	SQ. MT.
i	AS PER PLINE		1.990	X	2	=	3.980	SQ. MT.
j	0.450	X	0.315	X	2	=	0.630	SQ. MT.
k	0.450	X	0.930	X	1	=	0.930	SQ. MT.
m	0.525	X	0.665	X	2	=	1.330	SQ. MT.
n	0.435	X	0.600	X	4	=	2.400	SQ. MT.
p	0.460	X	1.145	X	2	=	2.290	SQ. MT.
TOTAL AREA (B)						=	24.932	SQ. MT.

STILT AREA ON GROUND FLOOR								
1	1.985	X	0.600	X	1	=	1.191	SQ. MT.
2	5.150	X	1.155	X	2	=	11.897	SQ. MT.
3	4.800	X	4.155	X	2	=	39.888	SQ. MT.
4	2.440	X	3.510	X	1	=	8.564	SQ. MT.
5	2.090	X	0.600	X	2	=	2.508	SQ. MT.
6	2.550	X	3.350	X	1	=	8.543	SQ. MT.
7	2.440	X	3.535	X	1	=	8.625	SQ. MT.
8	2.055	X	0.625	X	1	=	1.284	SQ. MT.
9	0.235	X	3.925	X	1	=	0.922	SQ. MT.
10	3.280	X	4.485	X	1	=	14.711	SQ. MT.
11	2.250	X	3.365	X	1	=	7.571	SQ. MT.
12	0.520	X	0.120	X	4	=	0.250	SQ. MT.
TOTAL AREA (C)						=	105.954	SQ. MT.

TOTAL GROUND COVERAGE								
F. A. R. AREA		SHAFT AREA		STILT AREA		GROUND COVD. AREA		
568.912	+	24.932	+	105.954	=	699.798	SQ. MT.	

F A R ON GROUND FLOOR								
F. A. R. AREA		SHAFT AREA				GROUND FAR AREA		
568.912	+	24.932			=	593.844	SQ. MT.	

AS BUILT AREA OF TOWER - B								
AREA CALCULATION OF 1ST TO 17TH FLOOR (A)								
A	2.595	X	1.115	X	4	=	11.574	SQ. MT.
B	4.475	X	0.525	X	4	=	9.398	SQ. MT.
C	15.450	X	3.510	X	2	=	108.459	SQ. MT.
D	13.690	X	1.615	X	2	=	44.219	SQ. MT.
E	12.270	X	3.165	X	2	=	77.669	SQ. MT.
F	7.420	X	2.860	X	2	=	42.442	SQ. MT.
G	2.730	X	0.230	X	1	=	0.628	SQ. MT.
H	5.515	X	3.830	X	1	=	21.122	SQ. MT.
I	1.615	X	3.360	X	1	=	5.426	SQ. MT.
J	0.230	X	0.585	X	1	=	0.135	SQ. MT.
K	2.330	X	2.495	X	1	=	5.813	SQ. MT.
L	1.600	X	0.365	X	1	=	0.584	SQ. MT.
M	9.815	X	3.580	X	1	=	35.138	SQ. MT.
N	9.065	X	2.025	X	1	=	18.357	SQ. MT.
O	0.230	X	0.915	X	1	=	0.210	SQ. MT.
P	3.020	X	7.420	X	1	=	22.408	SQ. MT.
Q	2.955	X	9.160	X	1	=	27.068	SQ. MT.
R	0.670	X	9.400	X	1	=	6.298	SQ. MT.
S	5.150	X	13.530	X	1	=	69.680	SQ. MT.
T	1.980	X	5.960	X	1	=	11.801	SQ. MT.
U	2.800	X	2.055	X	2	=	11.508	SQ. MT.
V	2.250	X	9.420	X	1	=	21.195	SQ. MT.
W	3.165	X	11.660	X	1	=	36.904	SQ. MT.
X	2.900	X	3.350	X	1	=	9.715	SQ. MT.
Y	3.165	X	5.310	X	1	=	16.806	SQ. MT.
Z	2.090	X	0.600	X	2	=	2.508	SQ. MT.
A'	1.985	X	5.910	X	1	=	11.731	SQ. MT.
B'	2.440	X	3.510	X	1	=	8.564	SQ. MT.
C'	2.055	X	5.935	X	1	=	12.196	SQ. MT.
D'	2.440	X	3.535	X	1	=	8.625	SQ. MT.
E'	3.095	X	5.310	X	1	=	16.434	SQ. MT.
F'	0.520	X	0.120	X	4	=	0.250	SQ. MT.
TOTAL AREA						=	674.866	SQ. MT.

SHAFT WALLS AREA ON TYPICAL FLOOR								
a	0.450	X	0.230	X	4		0.414	SQ. MT.
a'	0.115	X	1.410	X	4	=	0.649	SQ. MT.
b	S PER PLINE		0.280	X	4	=	1.120	SQ. MT.
c	0.415	X	0.150	X	4	=	0.249	SQ. MT.
c'	0.110	X	0.275	X	4	=	0.121	SQ. MT.
c"	0.230	X	0.415	X	4	=	0.382	SQ. MT.
d	0.110	X	0.555	X	4	=	0.244	SQ. MT.
d'	0.150		0.600	X	4	=	0.360	SQ. MT.
e	0.150	X	0.700	X	4	=	0.420	SQ. MT.
e'	0.110	X	0.450	X	4	=	0.198	SQ. MT.
f	S PER PLINE		0.140	X	2	=	0.280	SQ. MT.
g	0.110	X	0.665	X	2	=	1.330	SQ. MT.
g'	0.150	X	0.935	X	2	=	1.870	SQ. MT.
h	0.115	X	0.570	X	2	=	1.140	SQ. MT.
h'	0.110	X	0.200	X	2	=	0.400	SQ. MT.
i	S PER PLINE		0.790	X	2	=	1.580	SQ. MT.
j	0.110	X	0.180	X	2	=	0.360	SQ. MT.
j'	0.150	X	0.450	X	2	=	0.900	SQ. MT.
k	S PER PLINE		0.280	X	1	=	0.280	SQ. MT.
m	0.150	X	0.555	X	2	=	1.110	SQ. MT.
m'	0.110	X	0.525	X	2	=	1.050	SQ. MT.
n	0.150	X	0.490	X	3	=	1.470	SQ. MT.
n'	0.110	X	0.435	X	3	=	1.305	SQ. MT.
p	0.110	X	1.035	X	2	=	2.070	SQ. MT.
p'	0.110	X	0.460	X	2	=	0.920	SQ. MT.
TOTAL AREA (B)						=	20.222	SQ. MT.

DEDUCTION AREA CALCULATION OF 1ST TO 17TH FLOOR (B)								
1	3.325	X	3.600	X	1	=	11.970	SQ. MT.
2	2.100	X	1.900	X	1	=	3.990	SQ. MT.
3	1.385	X	0.560	X	1	=	0.776	SQ. MT.
4	2.495	X	0.525	X	1	=	1.310	SQ. MT.
5	1.200	X	0.525	X	1	=	0.630	SQ. MT.
6	0.750	X	0.750	X	1	=	0.563	SQ. MT.
7	3.175	X	2.775	X	1	=	8.811	SQ. MT.
8	1.850	X	3.050	X	2	=	11.285	SQ. MT.
TOTAL AREA						=	39.334	SQ. MT.

TOTAL F. A. R. ON EACH FLOOR (1ST TO 14TH FLOOR)						
A	+	B	-	C	TOTAL AREA	
674.866	+	20.222	-	39.334	655.754	SQ. MT.

NON FAR AREA DETAIL OF TOWER - B								
1	3.325	X	3.600	X	1	=	11.970	SQ. MT.
2	2.100	X	1.900	X	1	=	3.990	SQ. MT.
7	3.175	X	2.775	X	1	=	8.811	SQ. MT.
8	1.850	X	3.050	X	2	=	11.285	SQ. MT.
TOTAL NON FAR AREA EACH FLOOR						=	36.056	SQ. MT.
NOS OF FLOORS		17	X	36.056			612.952	SQ. MT.

TOTAL F. A. R. OF TOWER - B		
GROUND FLOOR	593.844	SQ. MT.
1st FLOOR	655.754	SQ. MT.
2nd FLOOR	655.754	SQ. MT.
3rd FLOOR	655.754	SQ. MT.
4th FLOOR	655.754	SQ. MT.
5th FLOOR	655.754	SQ. MT.
6th FLOOR	655.754	SQ. MT.
7th FLOOR	655.754	SQ. MT.
8th FLOOR	655.754	SQ. MT.
9th FLOOR	655.754	SQ. MT.
10th FLOOR	655.754	SQ. MT.
11th FLOOR	655.754	SQ. MT.
12th FLOOR	655.754	SQ. MT.
13th FLOOR	655.754	SQ. MT.
14th FLOOR	655.754	SQ. MT.
15th FLOOR	655.754	SQ. MT.
16th FLOOR	655.754	SQ. MT.
17th FLOOR	655.754	SQ. MT.
	11741.662	SQ. MT.

AS BUILT AREA OF TOWER - B								
AREA WITHOUT SANCTION PLAN OF FIRST FLOOR								
I	1.615	X	3.360	X	1	=	5.426	SQ. MT.
V	2.250	X	9.420	X	1	=	21.195	SQ. MT.
W	3.165	X	11.660	X	1	=	36.904	SQ. MT.
X	2.900	X	3.350	X	1	=	9.715	SQ. MT.
Y	3.165	X	5.310	X	1	=	16.806	SQ. MT.
Z	2.090	X	0.600	X	2	=	2.508	SQ. MT.
A'	1.985	X	5.910	X	1	=	11.731	SQ. MT.
B'	2.440	X	3.510	X	1	=	8.564	SQ. MT.
C'	2.055	X	5.935	X	1	=	12.196	SQ. MT.
D'	2.440	X	3.535	X	1	=	8.625	SQ. MT.
E'	3.095	X	5.310	X	1	=	16.434	SQ. MT.
F'	0.520	X	0.120	X	4	=	0.250	SQ. MT.
TOTAL AREA						=	150.356	SQ. MT.

SHAFT WALLS AREA ON FIRST FLOOR								
m	0.150	X	0.555	X	2	=	1.110	SQ. MT.
m'	0.110	X	0.525	X	2	=	1.050	SQ. MT.
n	0.150	X	0.490	X	4	=	1.960	SQ. MT.
n'	0.110	X	0.435	X	4	=	1.740	SQ. MT.
p	0.110	X	1.035	X	2	=	2.070	SQ. MT.
p'	0.110	X	0.460	X	2	=	0.920	SQ. MT.
TOTAL AREA (B)						=	8.850	SQ. MT.

DEDUCTION AREA CALCULATION OF 1ST FLOOR (B)								
3	1.385	X	0.560	X	1	=	0.776	SQ. MT.
TOTAL AREA						=	0.776	SQ. MT.

AREA WITHOUT SANCTION PLAN OF FIRST FLOOR						
A	+	B	-	C	TOTAL AREA	
150.356	+	8.850	-	0.776	158.430	SQ. MT.

PROJECT NAME AND ADDRESS:

GROUP HOUSING MEASURING 16.33 ACRES LIC. NO. 44 OF 2008 DATED 07-03-2008,IN SECTOR 80 VILL BADOULI FARIDABAD.

CLIENT NAME AND ADDRESS:

M/S COUNTRYWIDE PROMOTERS PVT. LTD.,M-11, MIDDLE CIRCLE, CONNAUGHT CIRCUS NEW DELHI – 110 001,TEL: 51517459, FAX: 91-11-23415298.

NAME OF THE DRAWING:

AS BUILT AREA DIAGRAM (TOWER - B)

Drg. Code No.: A1L05/4

DATE :

Rev. No. R0

North N

SCALE : 1:100

PRINCIPAL ARCHITECT:

DESIGN FORUM INTERNATIONAL

K-47, KAILASH COLONY, NEW DELHI

TEL : 011 - 46556600

DESIGN FORUM INTERNATIONAL

ARCHITECTURE URBAN DESIGN TOWN PLANNING